Hestiamo

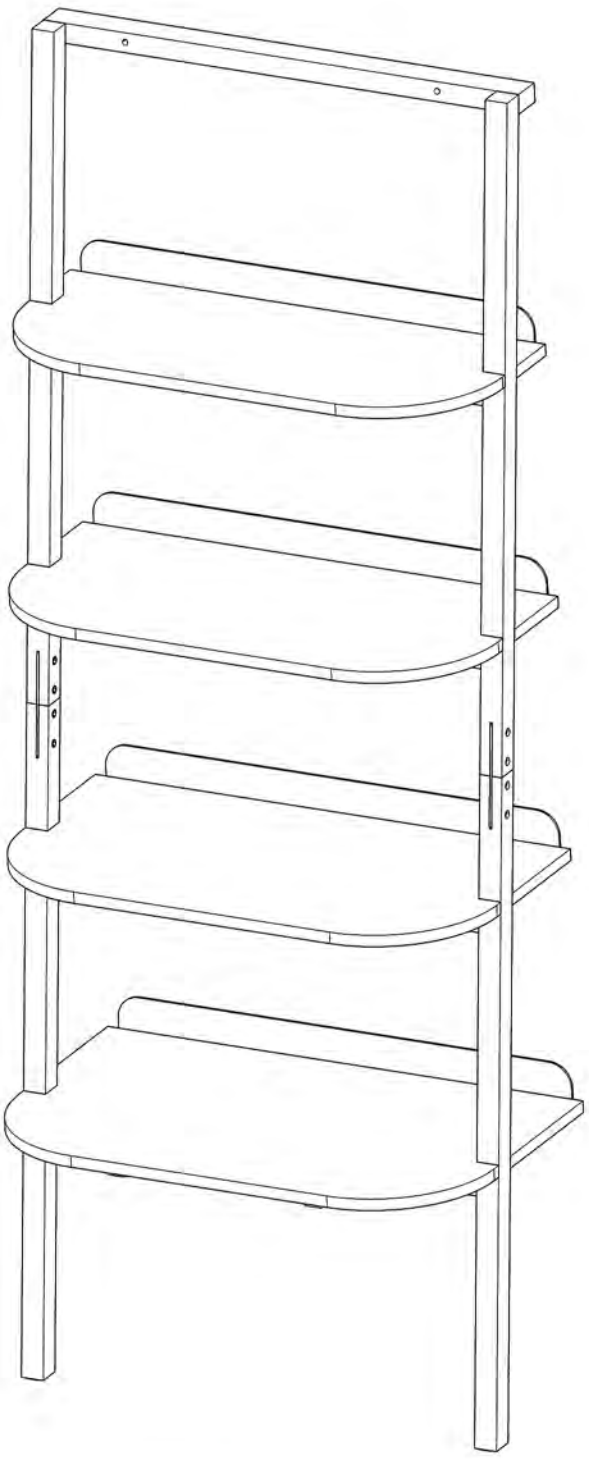

2024-01

HSTR02

TOOLS:





Pour en savoir plus:
www.quefairedemesdechets.fr

1



2



3



4

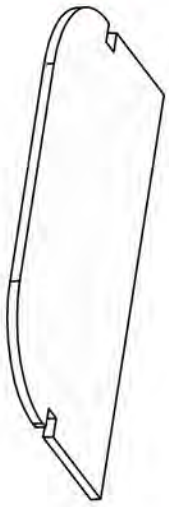

5

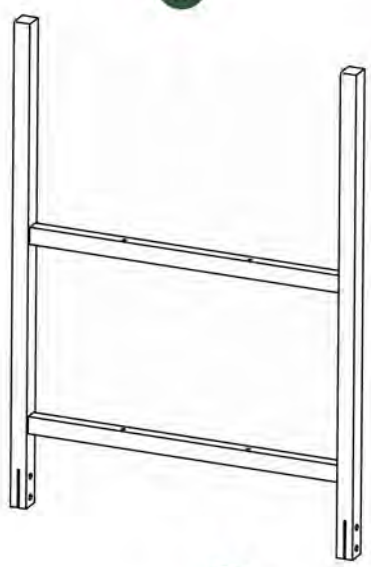

6

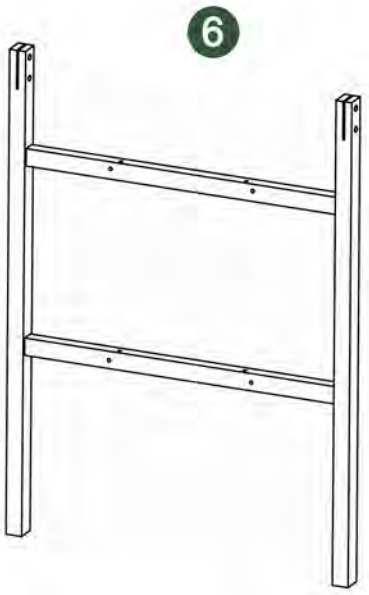

7



8
×
4



9
×
4



10
×
2



UNIT:MM

A
×
8



M6*35

B
×
14



M4*30

C
×
8



M6*12

D
×
8



M6*10

E
×
12



M4*12

UNIT:MM

F
×
2



4

G
×
2



30*11*2

H
×
2



M5*50

J
×
2



ϕ 8*40

Stand:07.2024

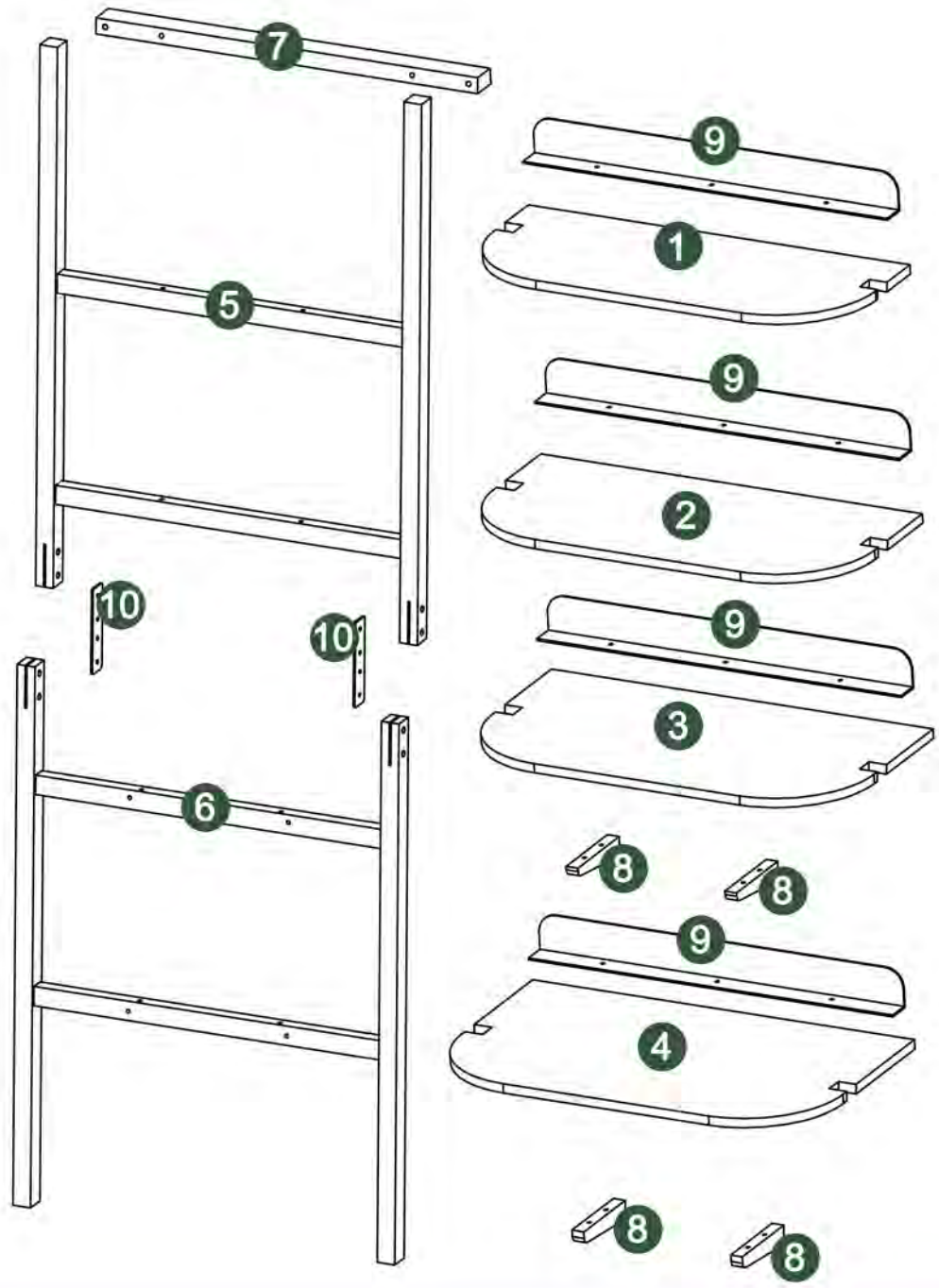
7
5
10
10
6
9
1
9
2
9
3
8
8
9
4
8
8

1.

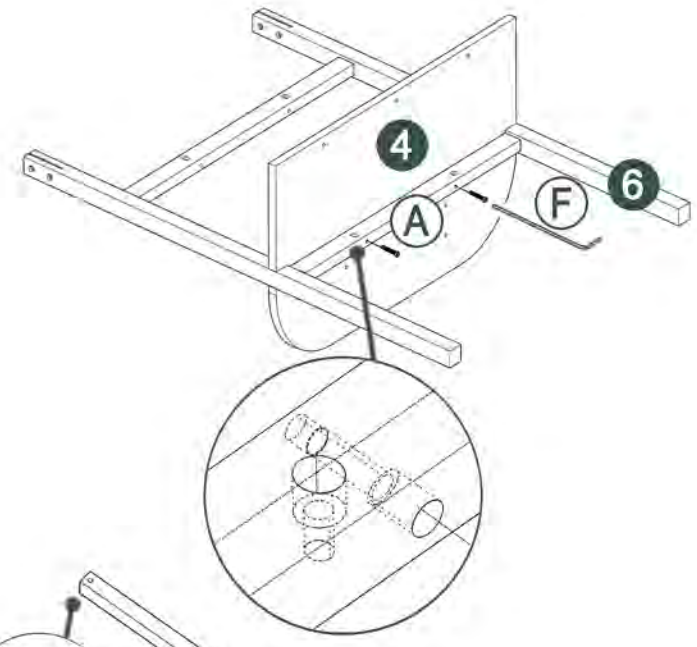

2.

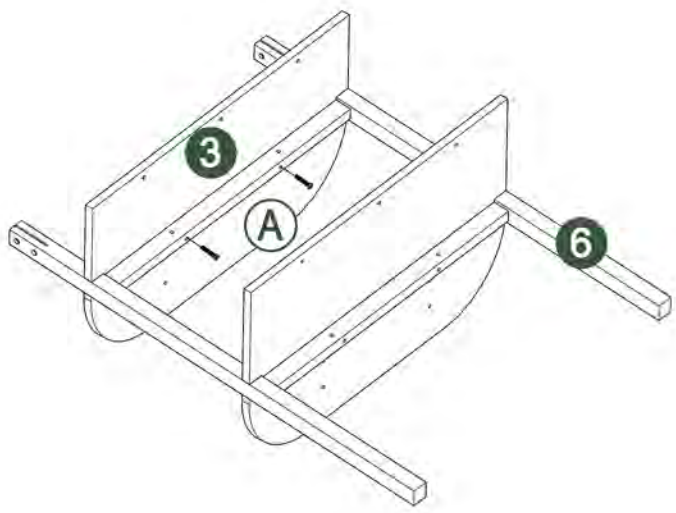

3.

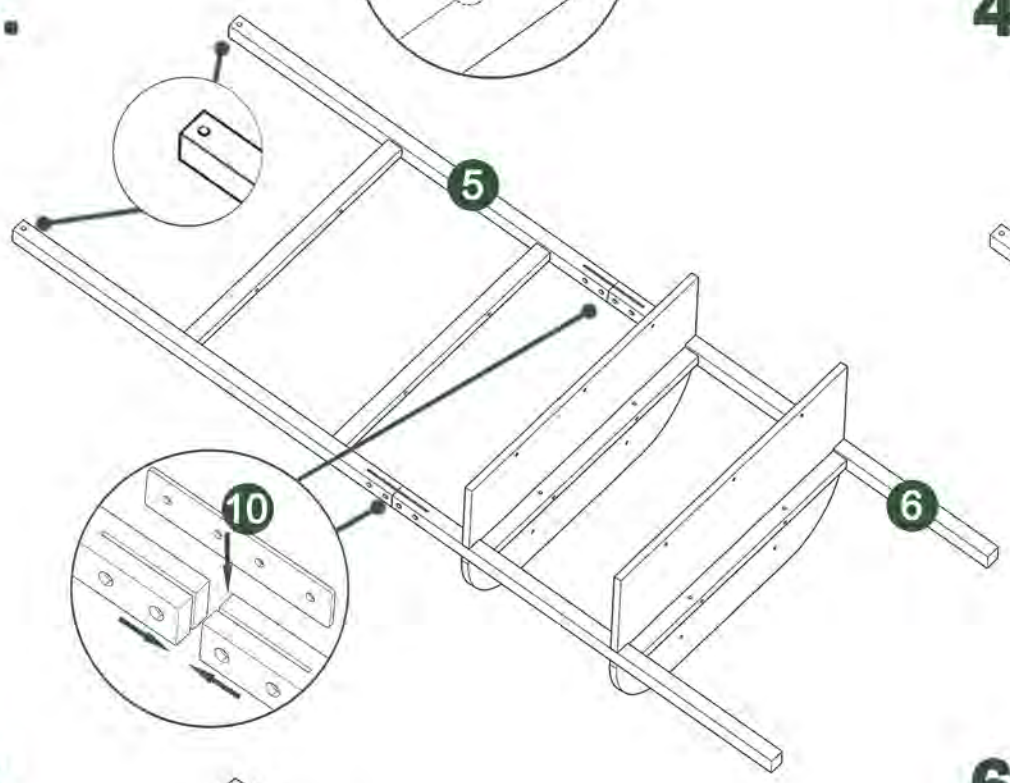

4.

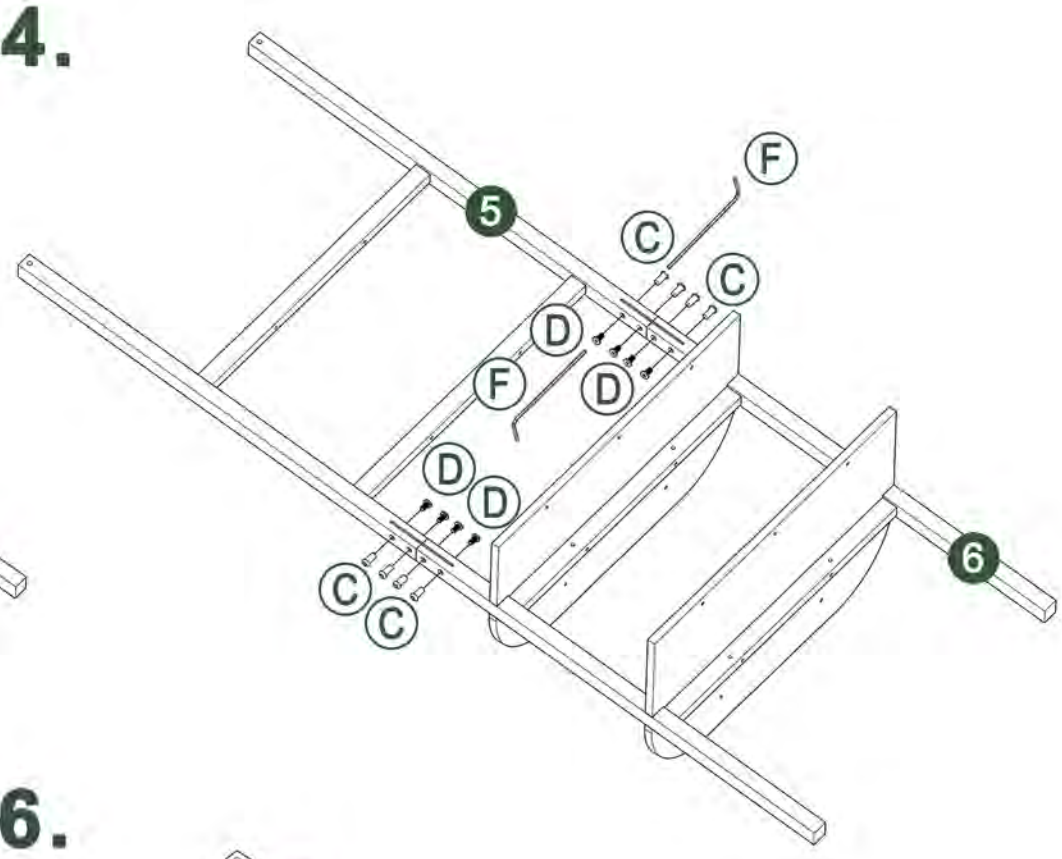

5.

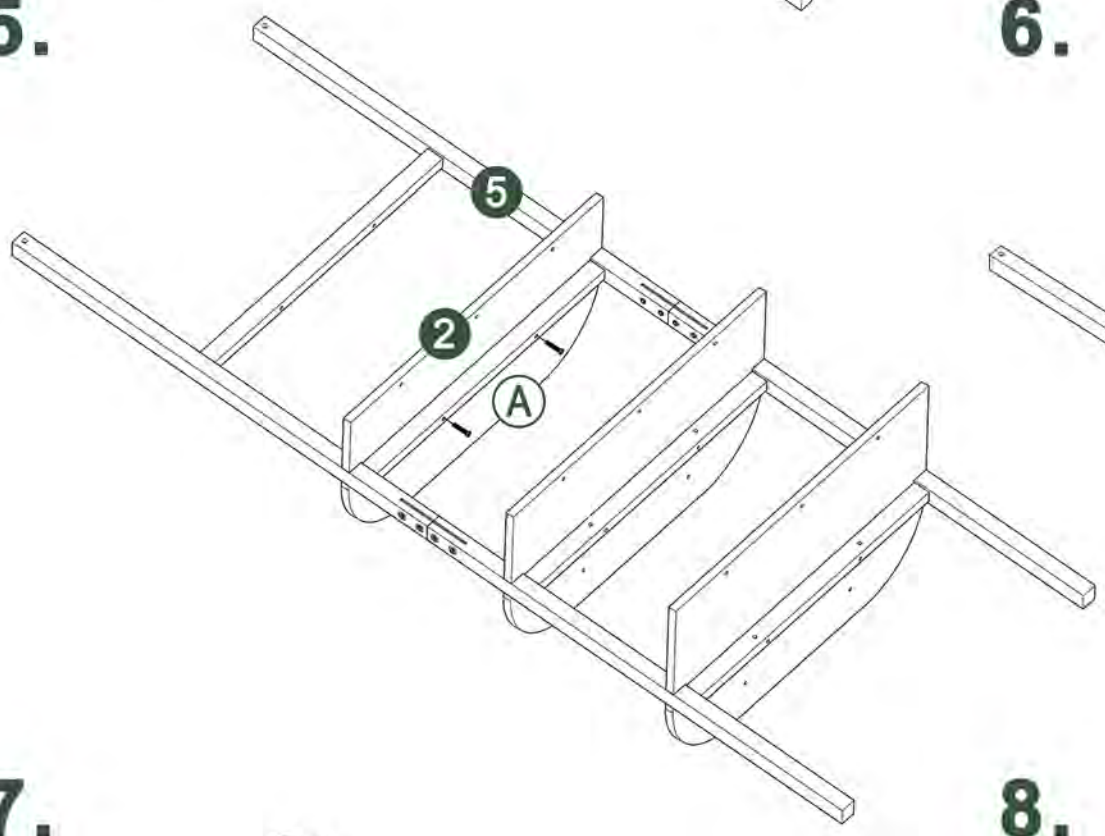

6.

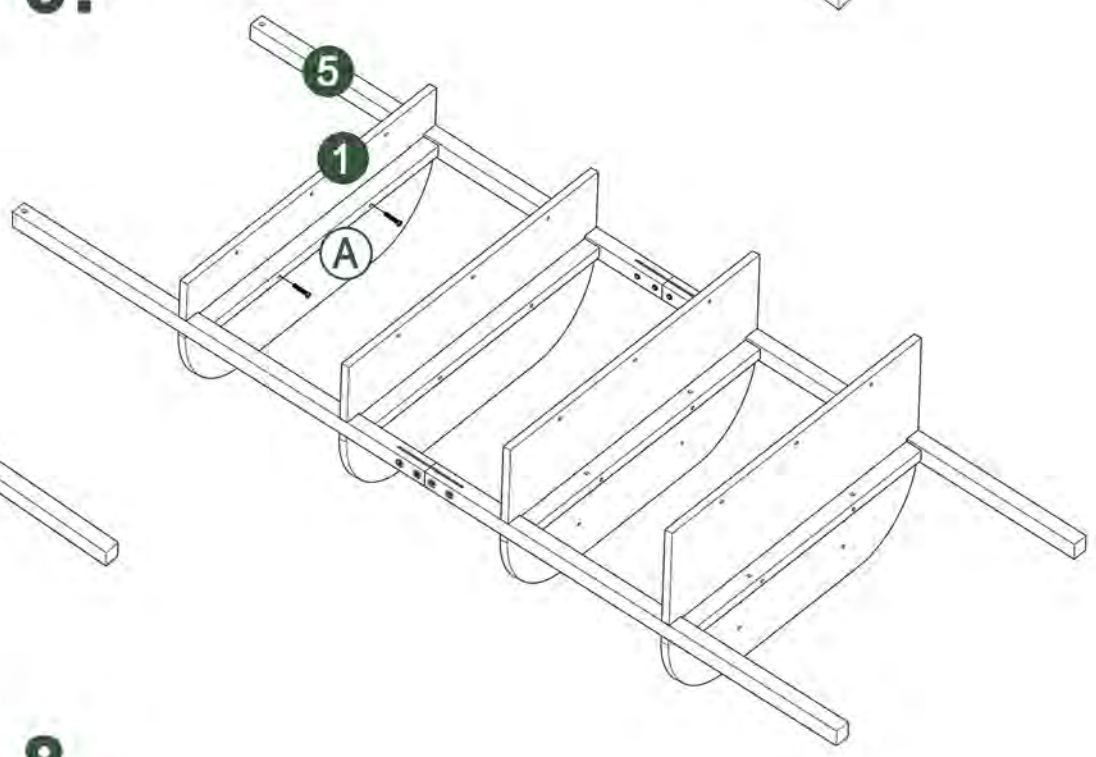

7.

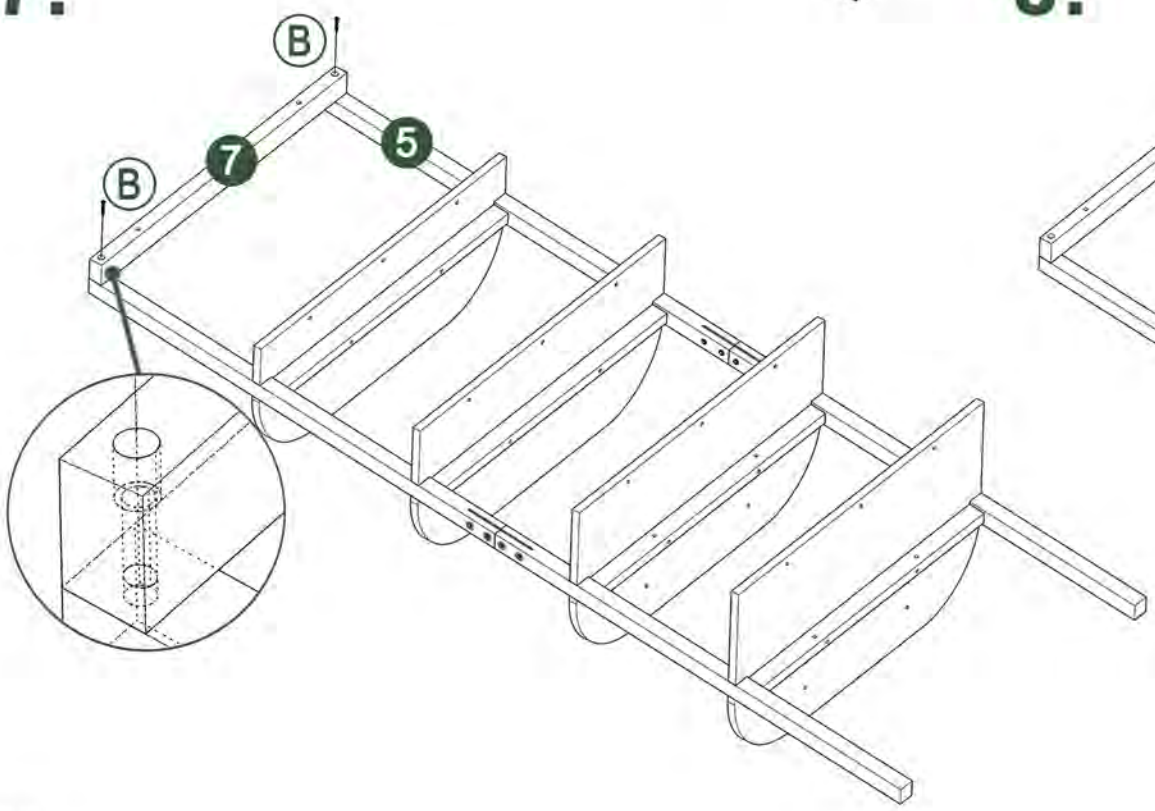

8.

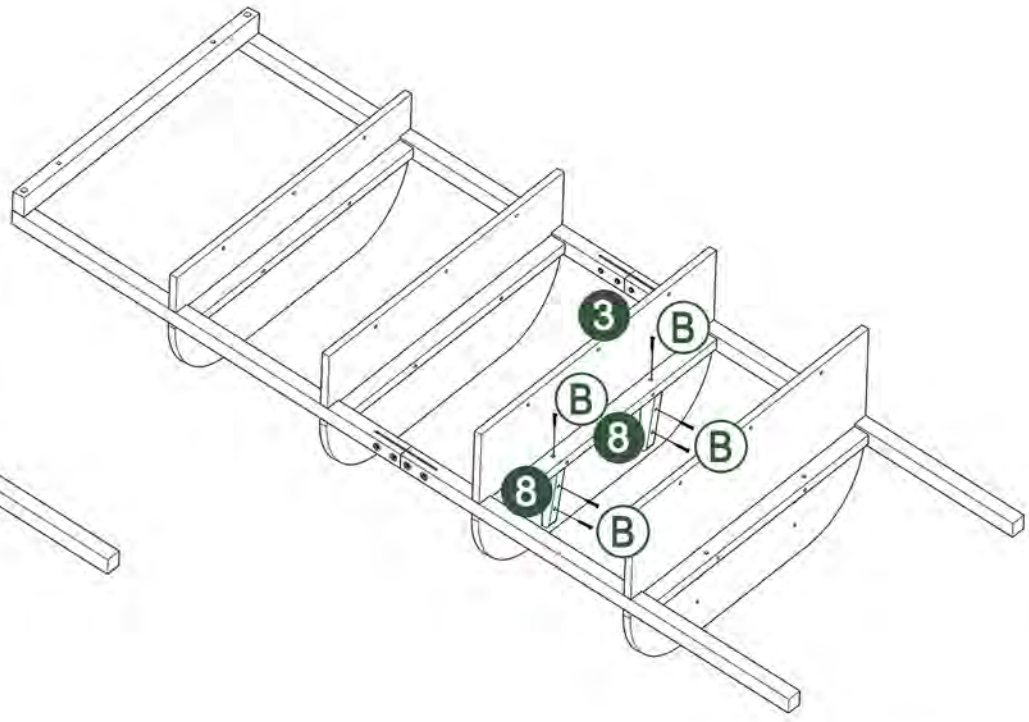

9.

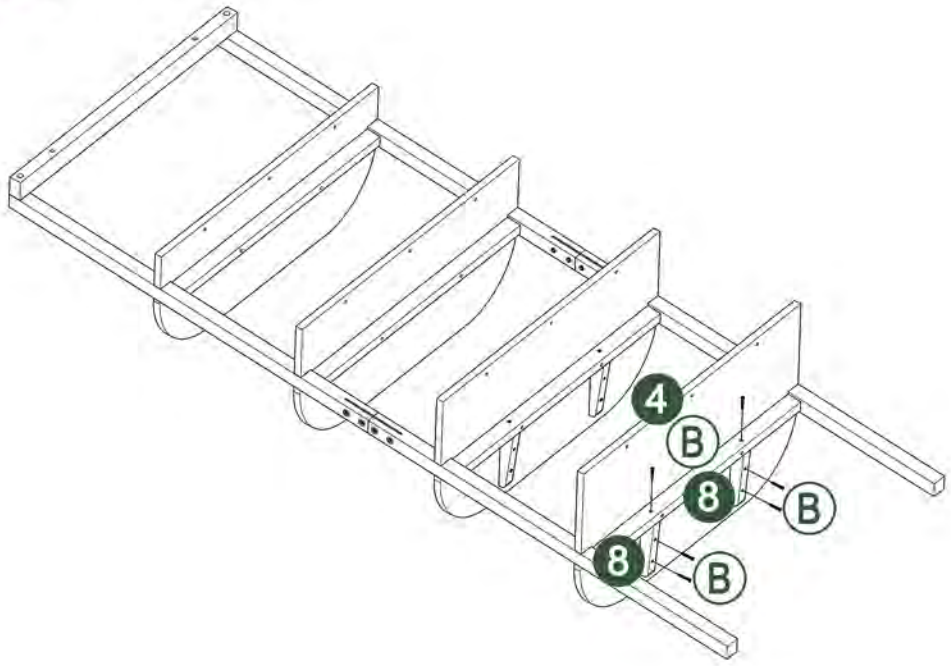

10.

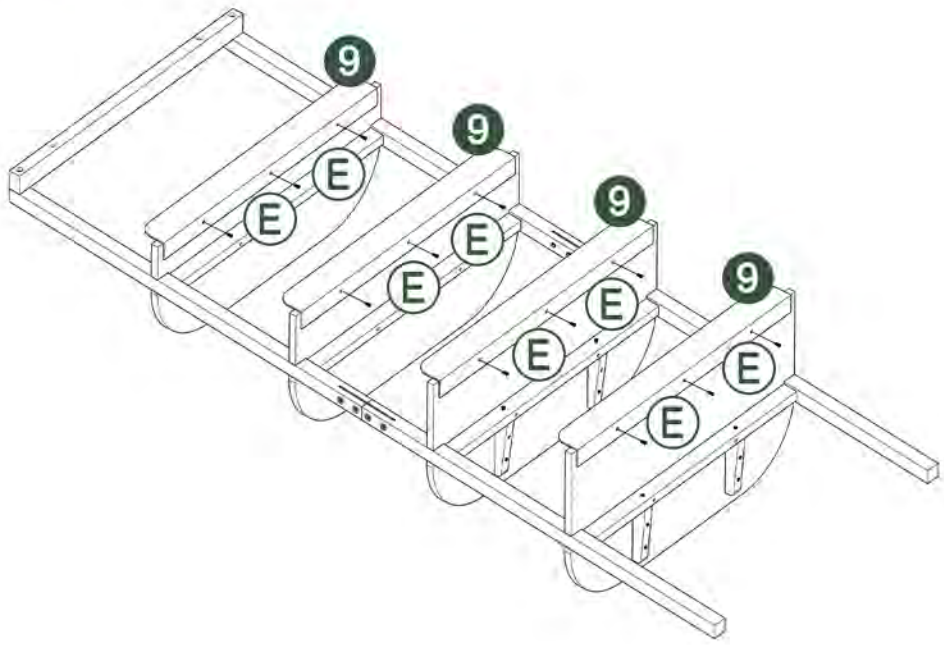

11.

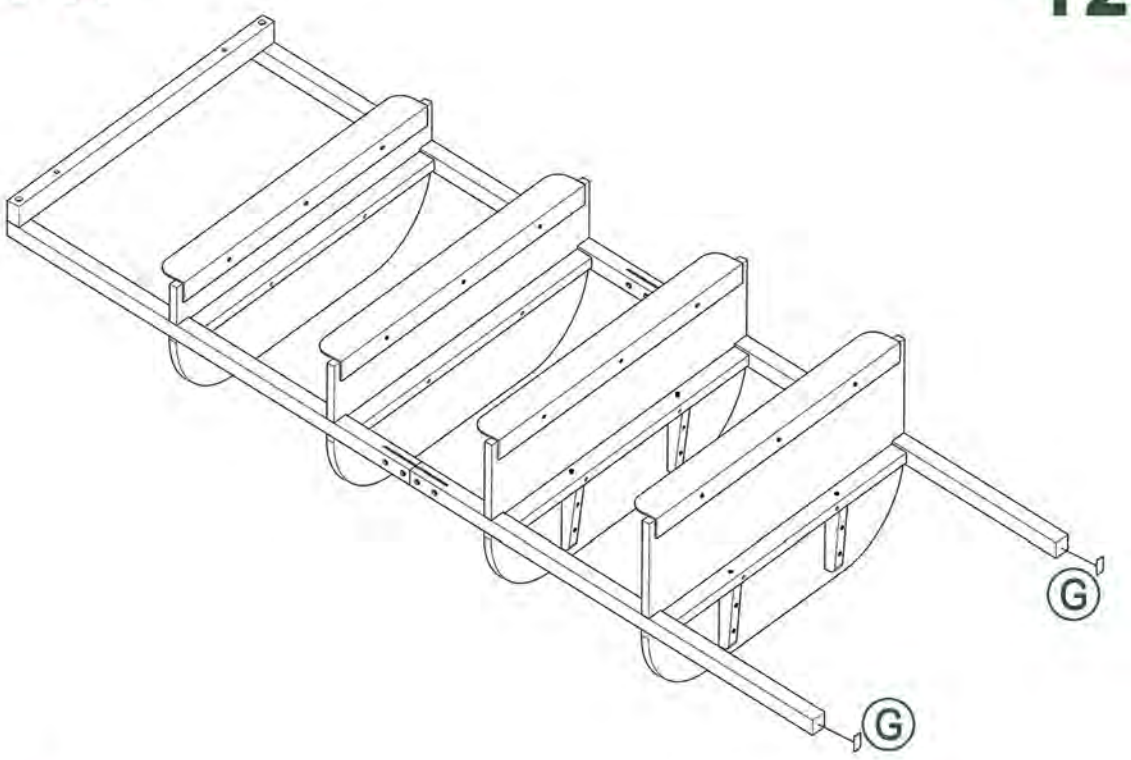

12.

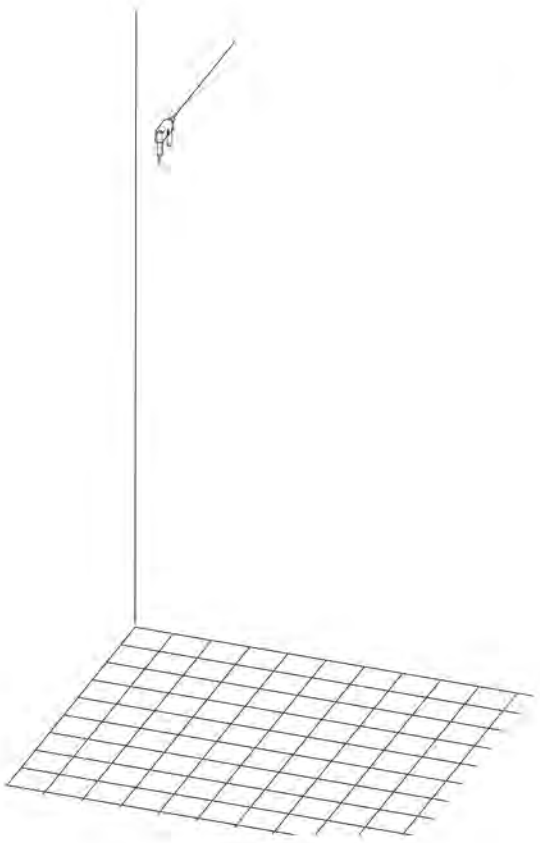

13.

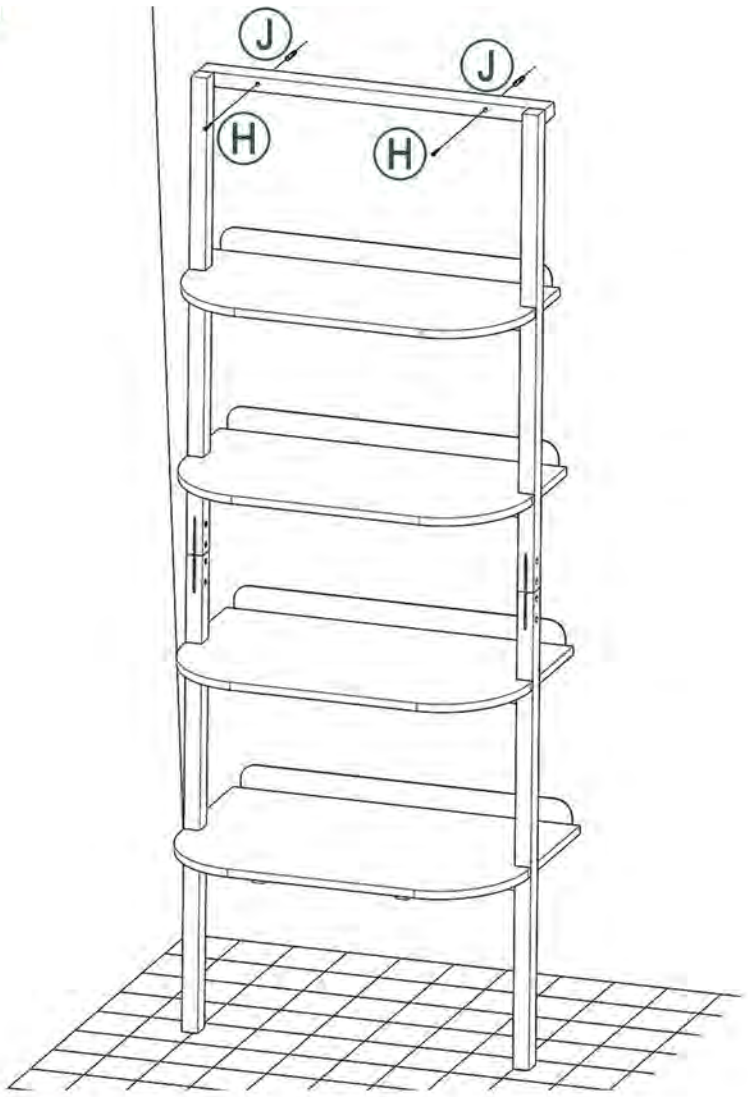


RATE YOUR
PACKAGING & WIN GIFTS
Scan the QR code to
answer a short survey
ENJOYING THE
INSTALLATION?
Scan the QR code to
share your review